Main Breakdown

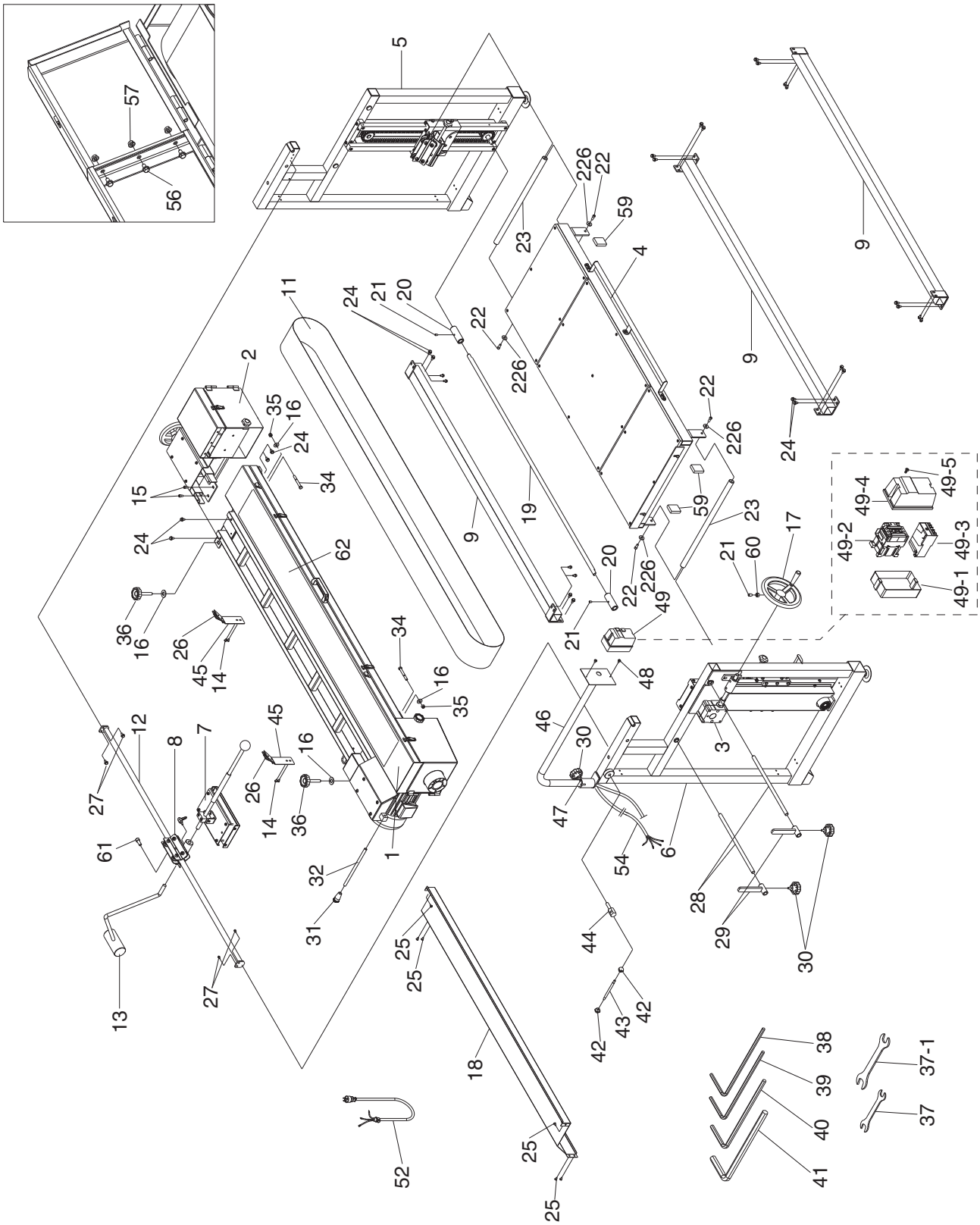

Main Parts List

REF	PART #	DESCRIPTION
1	P0679001	BELT PLATE ASSEMBLY
2	P0679002	FRONT BELT PLATE ASSEMBLY
3	P0679003	GEAR BOX ASSEMBLY
4	P0679004	TABLE ASSEMBLY
5	P0679005	RIGHT UPRIGHT ASSEMBLY
6	P0679006	LEFT UPRIGHT ASSEMBLY
7	P0679007	PLATEN ASSEMBLY
8	P0679008	PLATEN PRESS ASSEMBLY
9	P0679009	CONNECTING TUBE
10	P0679010	PHLP HD SCR 10-24 X 3/8
11	P0679011	SANDING BELT 100 GRIT
12	P0679012	PLATEN ASSEMBLY ROD
13	P0679013	COUNTERWEIGHT
14	P0679014	FLANGE BOLT 1/4-20 X 1/2
15	P0679015	FLANGE BOLT 5/16-18 X 1/2
16	P0679016	FLAT WASHER 1/2
17	P0679017	HANDWHEEL
18	P0679018	COVER
19	P0679019	CHAIN CONNECTING ROD
20	P0679020	CONNECTING ROD CAP
21	P0679021	SET SCREW 5/16-18 X 5/16
22	P0679022	CAP SCREW 5/16-18 X 3/4
23	P0679023	TABLE SPINDLE
24	P0679024	FLANGE BOLT 5/16-18 X 1/2
25	P0679025	PHLP HD SCR 1/4-20 X 3/8
26	P0679026	BELT COVER CLAMP
27	P0679027	HEX BOLT 1/4-20 X 1/2
28	P0679028	COVER SPINDLE
29	P0679029	TUBE CAP
30	P0679030	KNOB 5/16-18 X 3/4
31	P0679031	LEVER KNOB 1/2-12
32	P0679032	LEVER

REF	PART #	DESCRIPTION
34	P0679034	SHOULDER SCREW 1/2-13 X 3
35	P0679035	LOCK NUT 1/2-13
36	P0679036	LOCK KNOB 1/2-12 X 2-3/4
37	P0679037	COMBO WRENCH 12/14MM
37-1	P0679037-1	WRENCH 17 X 19
38	P0679038	HEX WRENCH 4MM
39	P0679039	HEX WRENCH 5MM
40	P0679040	HEX WRENCH 6MM
41	P0679041	HEX WRENCH 8MM
42	P0679042	BALL HANDLE 1/2-12
43	P0679043	ROD
44	P0679044	ANGLE SPINDLE
45	P0679045	COVER FIXING PLATE
46	P0679046	SWITCH SUPPORT
47	P0679047	CAP SCREW 1/4-20 X 1/2
48	P0679048	PHLP HD SCR 10-24 X 3/4
49	P0679049	MAGNETIC SWITCH 3HP 220V 1-PH
49-1	P0679049-1	SWITCH BASE
49-2	P0679049-2	CONTACTOR SDE MA-18
49-3	P0679049-3	OVERLOAD RELAY RA-20
49-4	P0679049-4	SWITCH COVER
49-5	P0679049-5	PLASTIC SCREW
51	P0679051	HEX NUT 10-24
52	P0679052	MOTOR CORD
54	P0679054	POWER CORD
56	P0679056	FLANGE BOLT 1/4-20 X 1/2
57	P0679057	HEX NUT 1/4"-20
59	P0679059	FOAM PAD
60	P0679060	HEX NUT 5/16"-18
61	P0679061	CAP SCREW 5/16-18 X 3/4
62	P0679062	GRAPHITE PAD
226	P0679226	FLAT WASHER 5/16

Belt & Idler Wheel Assembly Breakdown

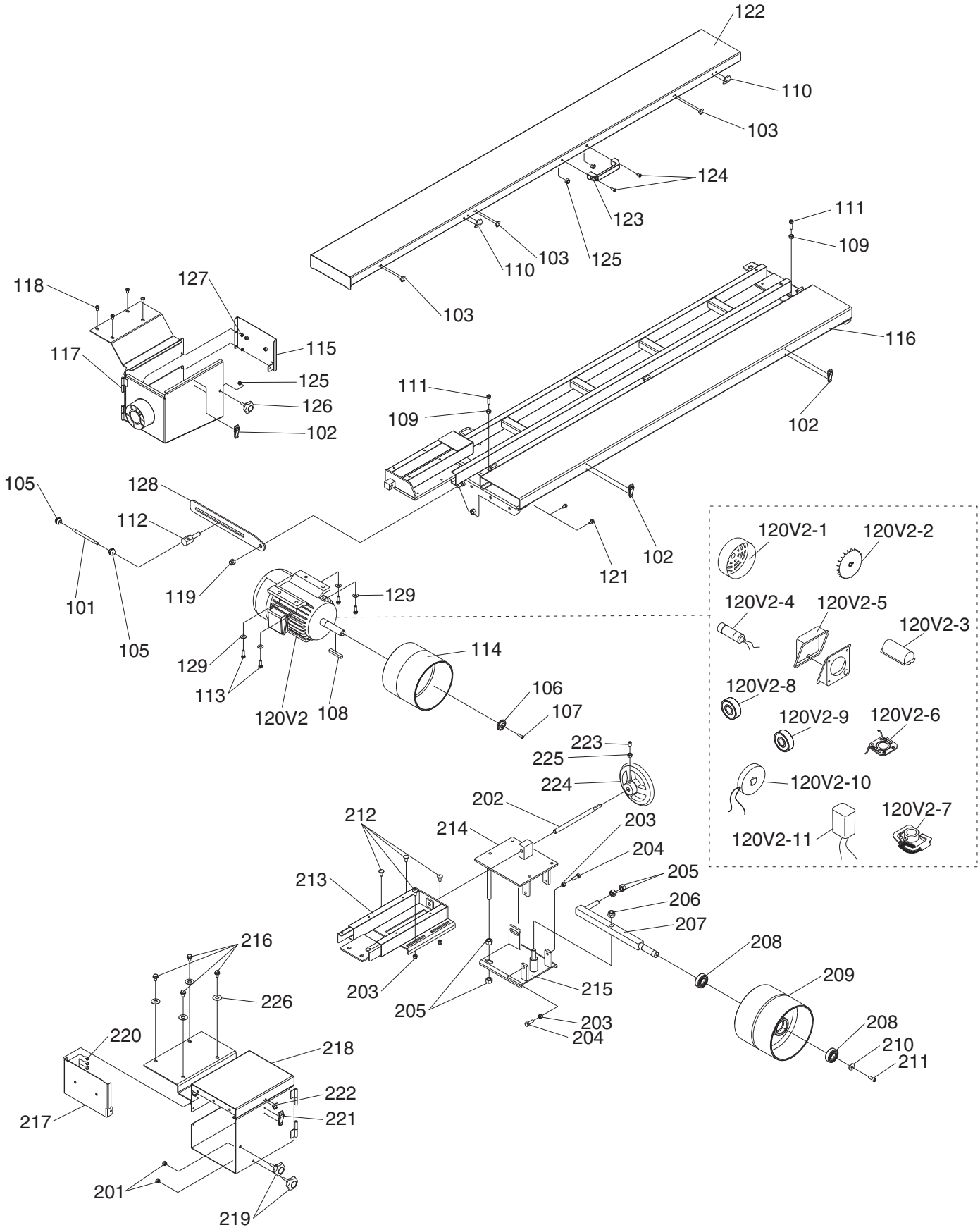

Belt Assembly Parts List

REF	PART #	DESCRIPTION
101	P0679101	BAR
102	P0679102	CLAMP (SMALL)
103	P0679103	HOOK (SMALL)
105	P0679105	BALL HANDLE
106	P0679106	FLANGE WASHER
107	P0679107	CAP SCREW M6-1 X 20
108	P0679108	KEY 7 X 7 X 75
109	P0679109	HEX NUT 3/8-16
110	P0679110	HOOK (BIG)
111	P0679111	CAP SCREW 3/8-16 X 1-1/4
112	P0679112	CONNECTOR 1/2-12 X 1-3/4
113	P0679113	HEX BOLT 5/16-18 X 1
114	P0679114	DRIVING WHEEL
115	P0679115	LEFT COVER BOARD
116	P0679116	BELT PLATE
117	P0679117	DRIVING WHEEL COVER
118	P0679118	PHLP HD SCR 5/16-18 X 1/2
119	P0679119	LOCK NUT 1/2-12
120V2	P0679120V2	MOTOR 3HP 220V 1-PH V2.10.11
120V2-1	P0679120V2-1	MOTOR FAN COVER
120V2-2	P0679120V2-2	MOTOR FAN
120V2-3	P0679120V2-3	CAPACITOR COVER
120V2-4	P0679120V2-4	S CAPACITOR 300M 125V 1-3/4 X 3-3/8
120V2-5	P0679120V2-5	MOTOR JUNCTION BOX
120V2-6	P0679120V2-6	CONTACT PLATE
120V2-7	P0679120V2-7	CENTRIFUGAL SWITCH
120V2-8	P0679120V2-8	BALL BEARING 6205-2RS (FRONT)
120V2-9	P0679120V2-9	BALL BEARING 6203-2RS (REAR)
120V2-10	P0679120V2-10	MOTOR BRAKE MCN CB-04-CS
120V2-11	P0679120V2-11	VOLTAGE REGULATOR AC 220V/DC90V
121	P0679121	FLANGE BOLT 5/16-18 X 1/2
122	P0679122	COVER
123	P0679123	HANDLE (BIG)

REF	PART #	DESCRIPTION
124	P0679124	PHLP HD SCR 1/4-20 X 3/4
125	P0679125	LOCK NUT 1/4-20
126	P0679126	KNOB 1/4-20 X 5/8
127	P0679127	PHLP HD SCR 1/4-20 X 3/8
128	P0679128	TILT LOCK BRACKET
129	P0679129	LOCK WASHER 5/16
201	P0679201	LOCK NUT 1/4-20
202	P0679202	ADJUSTABLE SPINDLE
203	P0679203	LOCK NUT 5/16-18
204	P0679204	HEX BOLT 5/16-18 X 1/2
205	P0679205	HEX NUT 1/2"-12
206	P0679206	SPECIAL NUT 1/2-13
207	P0679207	DRIVING WHEEL SPINDLE
208	P0679208	BALL BEARING 6204ZZ
209	P0679209	IDLER WHEEL
210	P0679210	DRUM WASHER
211	P0679211	CAP SCREW 5/16-18 X 3/4
212	P0679212	CARRIAGE BOLT 5/16-18 X 3/4
213	P0679213	FRONT BELT PLATE
214	P0679214	UPPER ADJUSTABLE SET
215	P0679215	LOWER ADJUSTABLE SET
216	P0679216	FLANGE BOLT 1/4-20 X 1/2
217	P0679217	RIGHT COVER
218	P0679218	DRIVING WHEEL COVER
219	P0679219	LOCK KNOB 1/4-20
220	P0679220	PHLP HD SCR 1/4-20 X 3/8
221	P0679221	CLAMP (SMALL)
222	P0679222	HOOK (SMALL)
223	P0679223	SET SCREW 5/16-18 X 1
224	P0679224	HANDWHEEL
225	P0679225	HEX NUT 5/16"-18
226	P0679226	FLAT WASHER 5/16

Gearbox & Table Breakdown & Parts List

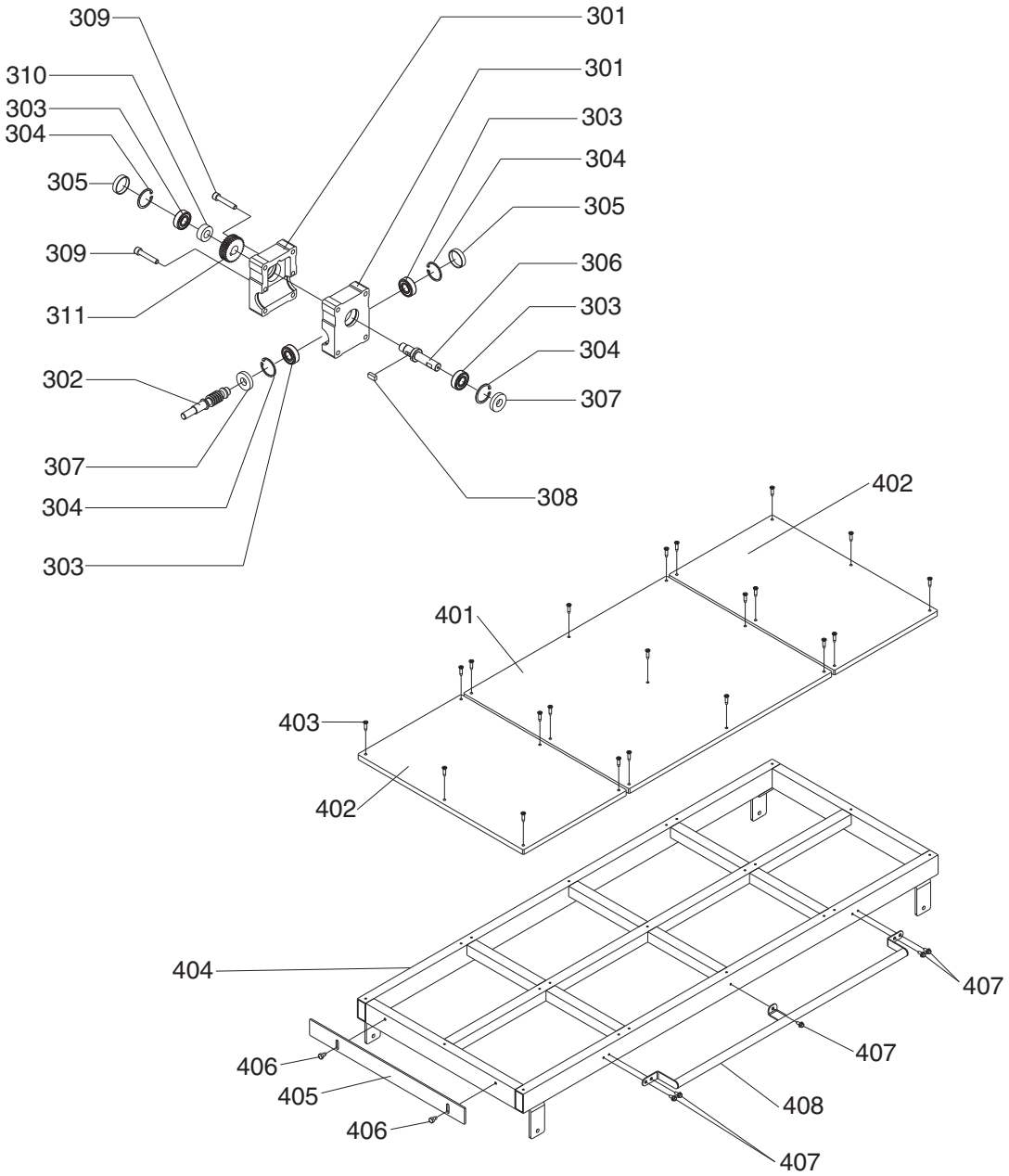

REF	PART #	DESCRIPTION
301	P0679301	GEAR BOX
302	P0679302	WORM SHAFT
303	P0679303	BALL BEARING 6202ZZ
304	P0679304	INT RETAINING RING 35MM
305	P0679305	REAR BUSHING
306	P0679306	GEAR SPINDLE
307	P0679307	FRONT BUSHING
308	P0679308	KEY 7 X 7 X 16
309	P0679309	CAP SCREW 5/16-18 X 1-1/2
310	P0679310	ALUMINUM SPACER

REF	PART #	DESCRIPTION
311	P0679311	WORM GEAR
401	P0679401	WOOD BOARD (LONG)
402	P0679402	WOOD BOARD (SHORT)
403	P0679403	FLAT HD SCR 1/4-20 X 1
404	P0679404	TABLE FRAME
405	P0679405	TABLE WORK STOP
406	P0679406	HEX BOLT 5/16-18 X 1/2
407	P0679407	FLANGE BOLT 1/4-20 X 1/2
408	P0679408	HANDLE (BIG)

Right Upright Assembly Breakdown

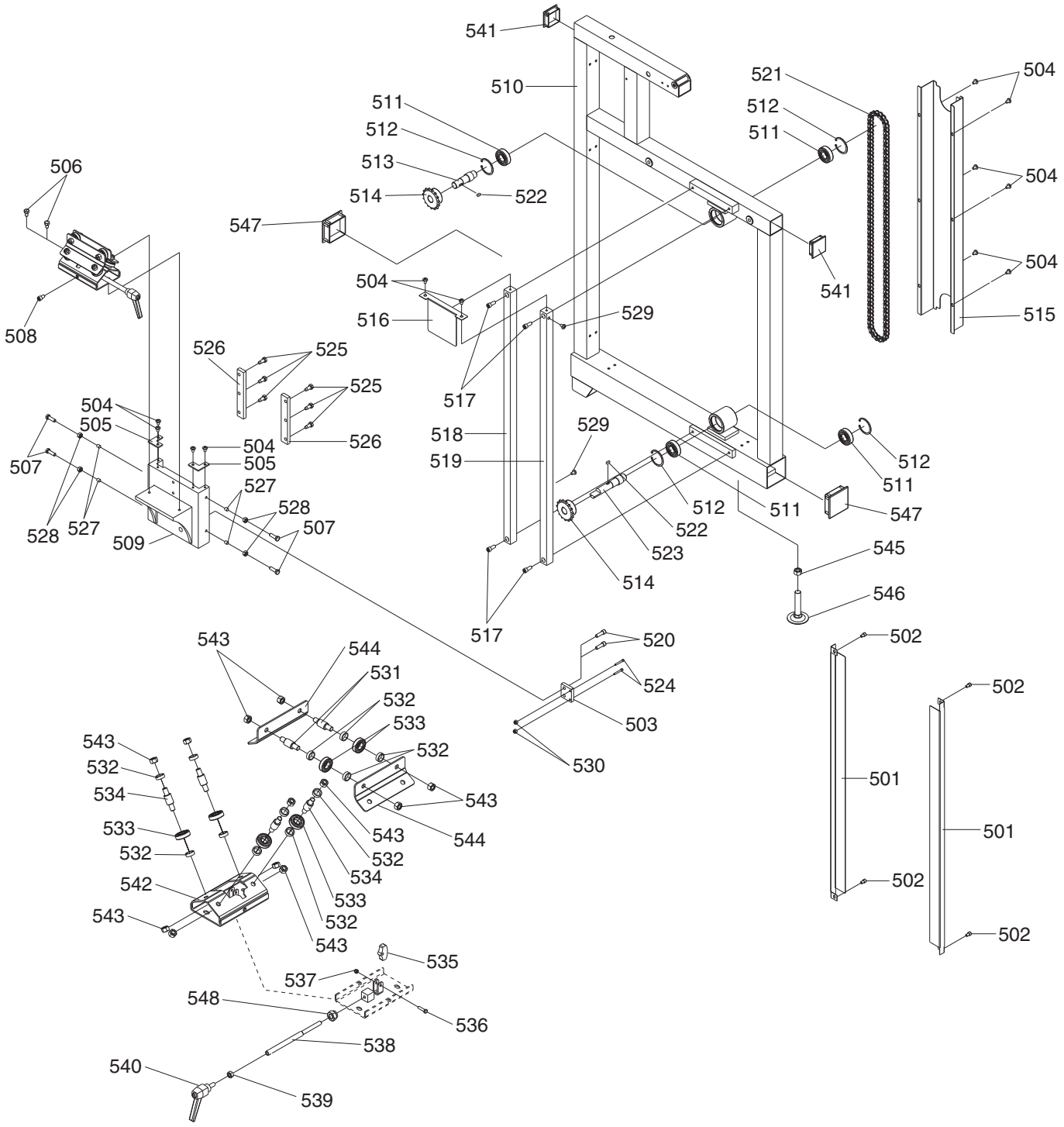

Right Upright Assembly Parts List

REF	PART #	DESCRIPTION
501	P0679501	CHAIN COVER
502	P0679502	CAP SCREW 1/4-20 X 3/8
504	P0679504	PHLP HD SCR 1/4-20 X 3/8
505	P0679505	L-PLATE
506	P0679506	HEX BOLT 5/16-18 X 1/2
507	P0679507	HEX BOLT 5/16-18 X 1
508	P0679508	CAP SCREW 5/16-18 X 1/2
509	P0679509	COVER
510	P0679510	RIGHT SUPPORT FOOT
511	P0679511	BALL BEARING 6240ZZ
512	P0679512	INT RETAINING RING 47MM
513	P0679513	CHAIN WHEEL ADAPTER
514	P0679514	SPROCKET
515	P0679515	CHAIN COVER
516	P0679516	DUST COVER
517	P0679517	CAP SCREW 5/16-18 X 3/4
518	P0679518	GEAR BAR (RIGHT)
519	P0679519	GEAR BAR (LEFT)
520	P0679520	CAP SCREW 5/16-18 X 1
521	P0679521	CHAIN
522	P0679522	KEY 5 X 5 X 10
523	P0679523	CHAIN TRANSMITTING SPINDLE
524	P0679524	CAP SCREW #8-32 X 1
525	P0679525	HEX BOLT 5/16-18 X 3/4

REF	PART #	DESCRIPTION
526	P0679526	TRACKING BOARD
527	P0679527	COPPER WEAR PIN
528	P0679528	HEX NUT 5/16"-18
529	P0679529	PHLP HD SCR 1/4-20 X 1/4
530	P0679530	LOCK NUT #8-32
531	P0679531	ECCENTRIC SPACER
532	P0679532	CAP
533	P0679533	BALL BEARING 6002ZZ
534	P0679534	ADAPTER
535	P0679535	SPINDLE FIXING BOARD
536	P0679536	SPECIAL BOLT M5-.8 X 20
537	P0679537	FLANGE NUT M5-.8
538	P0679538	ADJUSTABLE LOCKING ROD
539	P0679539	HEX NUT M8-1.25
540	P0679540	LOCK HANDLE M4-.7 X 13
541	P0679541	SQUARE CAP
542	P0679542	TRACKING SET (RIGHT)
543	P0679543	HEX NUT 3/8-16
544	P0679544	BRACKET
545	P0679545	HEX NUT 1/2"-12
546	P0679546	FOOT PAD
547	P0679547	CAP
548	P0679548	LOCK NUT 5/16-18

Left Upright Assembly Breakdown

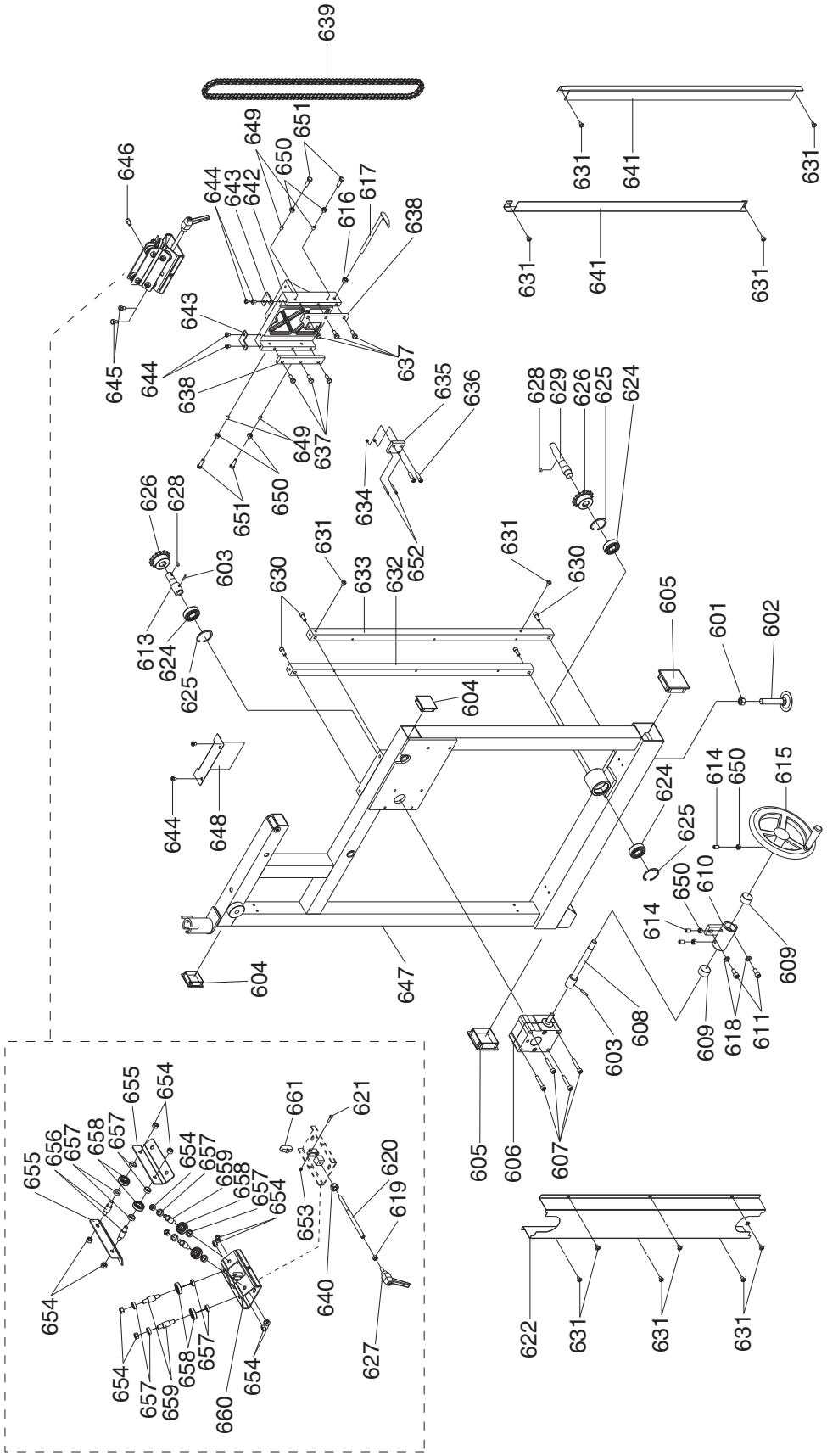

Left Upright Assembly Parts List

REF	PART #	DESCRIPTION
601	P0679601	HEX NUT 1/2"-12
602	P0679602	FOOT PAD
603	P0679603	SPECIAL PIN
604	P0679604	SQUARE CAP
605	P0679605	CAP
606	P0679606	GEAR BOX
607	P0679607	CAP SCREW M8-1.25 X 80
608	P0679608	HANDWHEEL SPINDLE
609	P0679609	COPPER TUBE
610	P0679610	HANDWHEEL ASSEMBLY
611	P0679611	CAP SCREW 3/8-16 X 3/4
613	P0679613	GEAR BOX SPINDLE
614	P0679614	SET SCREW 5/16-18 X 1/2
615	P0679615	HANDWHEEL
616	P0679616	HEX NUT 3/8"-16
617	P0679617	INDICATOR
618	P0679618	LOCK WASHER 3/8
619	P0679619	HEX NUT M8-1.25
620	P0679620	ADJUSTABLE BAR
621	P0679621	HEX BOLT M5-.8 X 20
622	P0679622	COVER
624	P0679624	BALL BEARING 6204ZZ
625	P0679625	INT RETAINING RING 47MM
626	P0679626	SPROCKET
627	P0679627	LOCK HANDLE
628	P0679628	KEY 5 X 5 X 10
629	P0679629	CHAIN SPINDLE ADAPTER
630	P0679630	CAP SCREW 5/16-18 X 3/4
631	P0679631	PHLP HD SCR 1/4-20 X 1/4
632	P0679632	GEAR BAR (LEFT)

REF	PART #	DESCRIPTION
633	P0679633	GEAR BAR (RIGHT)
634	P0679634	HEX NUT #8-32
635	P0679635	CHAIN FIXING BOARD
636	P0679636	CAP SCREW 5/16-18 X 1
637	P0679637	HEX BOLT 5/16-18 X 3/4
638	P0679638	FIXING BOARD
639	P0679639	CHAIN
640	P0679640	LOCK NUT 5/16-18
641	P0679641	CHAIN COVER
642	P0679642	COVER
643	P0679643	L-PLATE
644	P0679644	PHLP HD SCR 1/4-20 X 3/8
645	P0679645	HEX BOLT 5/16-18 X 1/2
646	P0679646	HEX BOLT 5/16-18 X 1/2
647	P0679647	SUPPORT FOOT (LEFT)
648	P0679648	DUST COVER
649	P0679649	COPPER WEAR PIN
650	P0679650	HEX NUT 5/16"-18
651	P0679651	HEX BOLT 5/16-18 X 1
652	P0679652	CAP SCREW #8-32 X 1
653	P0679653	LOCK NUT M5-.8
654	P0679654	HEX NUT 3/8"-16
655	P0679655	TRACKING ADJUSTABLE BOARD
656	P0679656	BEARING SPACER
657	P0679657	CAP
658	P0679658	BALL BEARING 6002ZZ
659	P0679659	TRACKING SPINDLE
660	P0679660	TRACKING SET
661	P0679661	SPINDLE FIXING BOARD

Platen Press Assembly Breakdown & Parts List

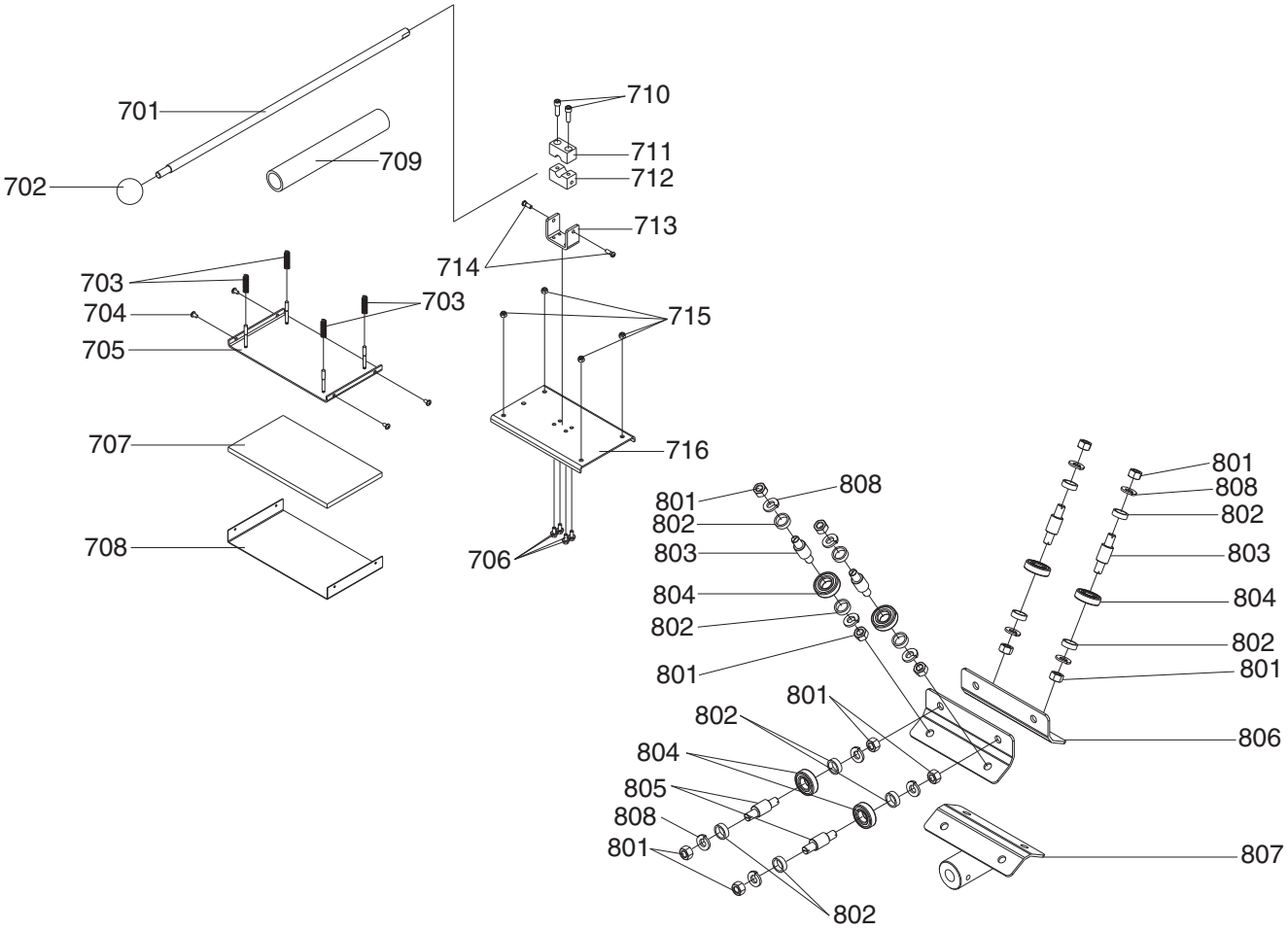

REF	PART #	DESCRIPTION
701	P0679701	PLATEN PRESS HANDLE
702	P0679702	BALL KNOB 1/2-12
703	P0679703	COMPRESSION SPRING
704	P0679704	PHLP HD SCR 3/16-18 X 3/8
705	P0679705	LOWER PRESS BRACKET
706	P0679706	FLANGE BOLT 1/4-20 X 1/2
707	P0679707	PLATEN FOAM PAD
708	P0679708	PLATEN GRAPHITE PAD
709	P0679709	FOAM TUBE
710	P0679710	CAP SCREW 5/16-18 X 1
711	P0679711	UPPER CLAMP PLATE
712	P0679712	LOWER CLAMP PLATE

REF	PART #	DESCRIPTION
713	P0679713	CLAMP BRACKET
714	P0679714	SPECIAL SCREW
715	P0679715	LOCK NUT 1/4-20
716	P0679716	UPPER PRESS BRACKET
801	P0679801	HEX NUT 3/8-16
802	P0679802	SPACER
803	P0679803	BEARING SHAFT
804	P0679804	BALL BEARING 6002ZZ
805	P0679805	ECCENTRIC BEARING SHAFT
806	P0679806	TRACKING PLATE
807	P0679807	PRESS BRACKET
808	P0679808	FLAT WASHER 3/8

Labels Breakdown & Parts List

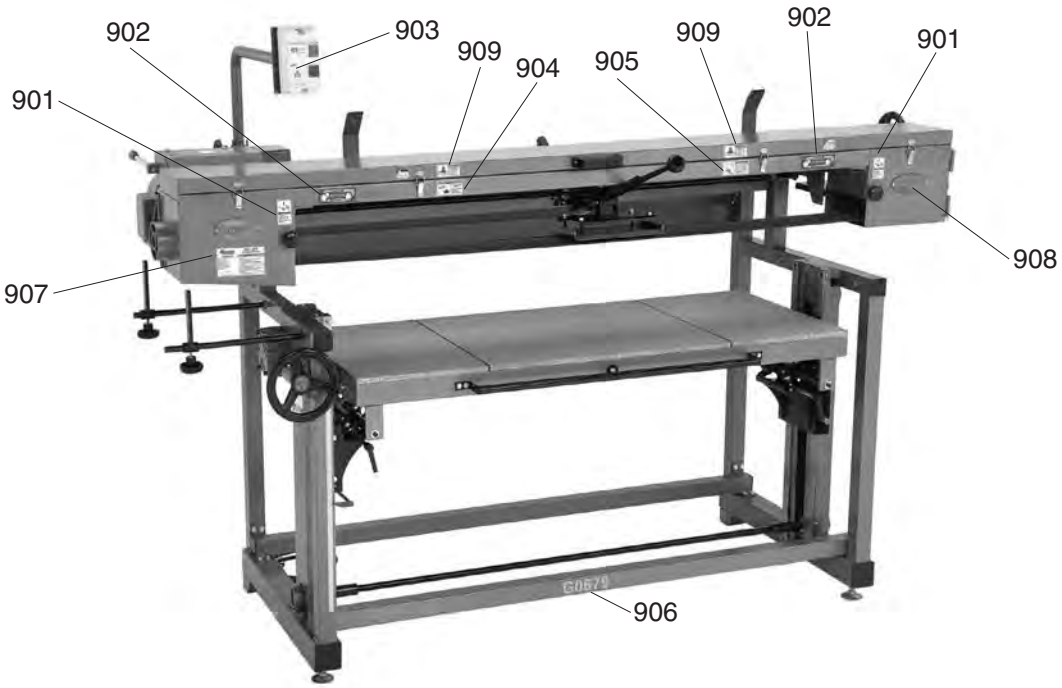

REF	PART #	DESCRIPTION
901	P0679901	DISCONNECT POWER LABEL VS
902	P0679902	BELT DIRECTION LABEL
903	P0679903	ELECTRICITY LABEL 0.7"
904	P0679904	GLASSES RESPIRATOR LABEL HS
905	P0679905	READ MANUAL LABEL HS

REF	PART #	DESCRIPTION
906	P0679906	MODEL NUMBER LABEL
907	P0679907	MACHINE ID LABEL
908	P0679908	GRIZZLY NAMEPLATE
909	P0679909	HAND INJURY WARNING LABEL
910	P0679910	DIRECTION ARROW LABEL

⚠WARNING

Safety labels warn about machine hazards and ways to prevent injury. The owner of this machine MUST maintain the original location and readability of the labels on the machine. If any label is removed or becomes unreadable, REPLACE that label before using the machine again. Contact Grizzly at (800) 523-4777 or www.grizzly.com to order new labels.